TLP
HL-MM-1

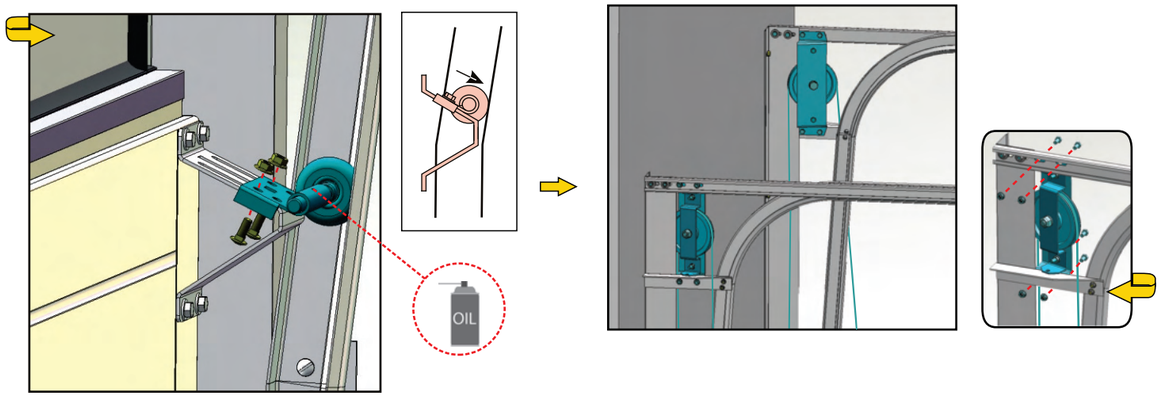
OIL

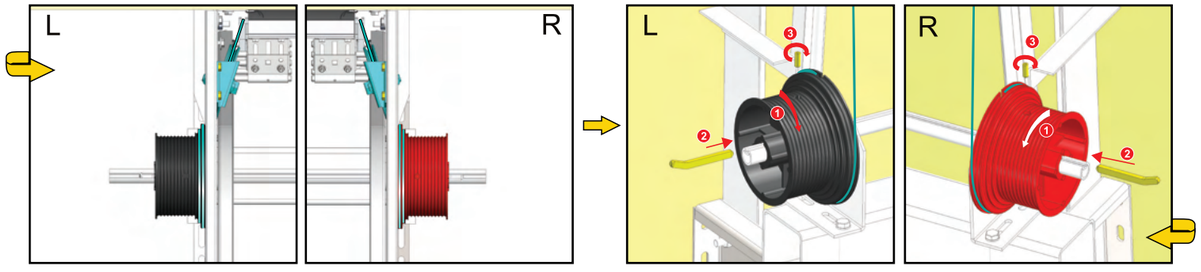
L
R
L
R

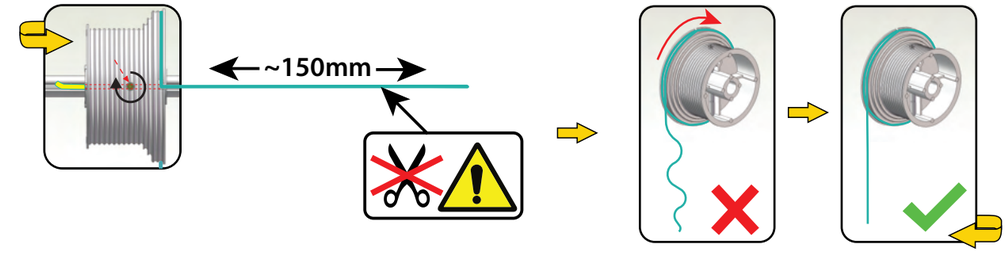
~150mm

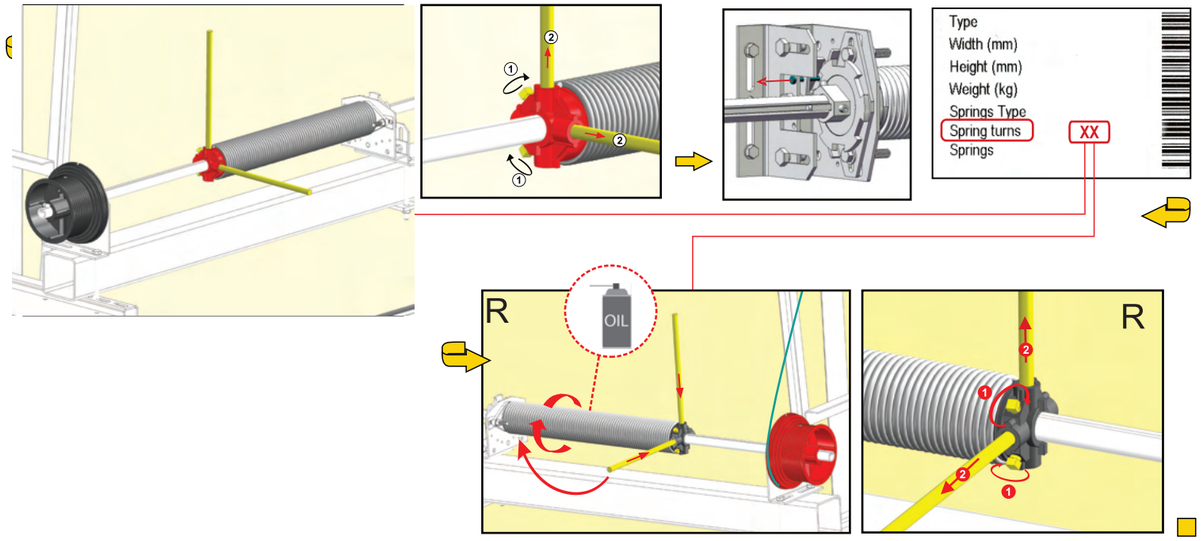
Type
Width (mm)
Height (mm)
Weight (kg)
Springs Type
Spring turns
Springs
XX
OIL
R
R

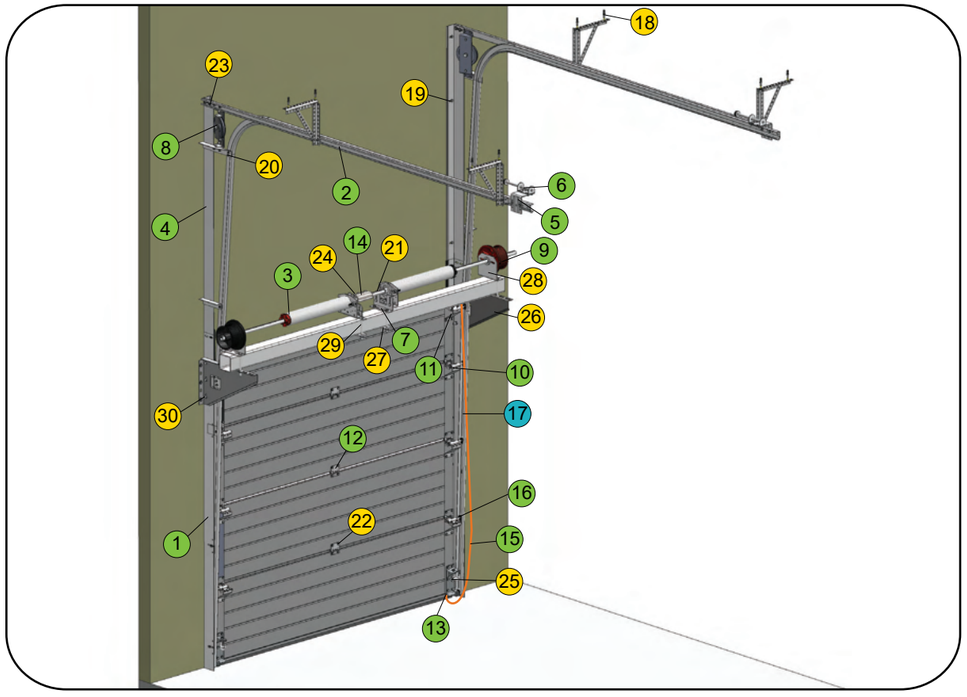
1
2
3
4
5
6
7
8
9
10
11
12
13
14
15
16
17
18
19
20
21
22
23
24
25
26
27
28
29
30

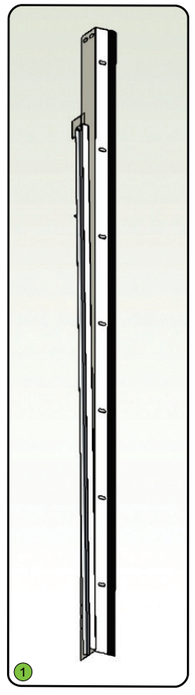
1

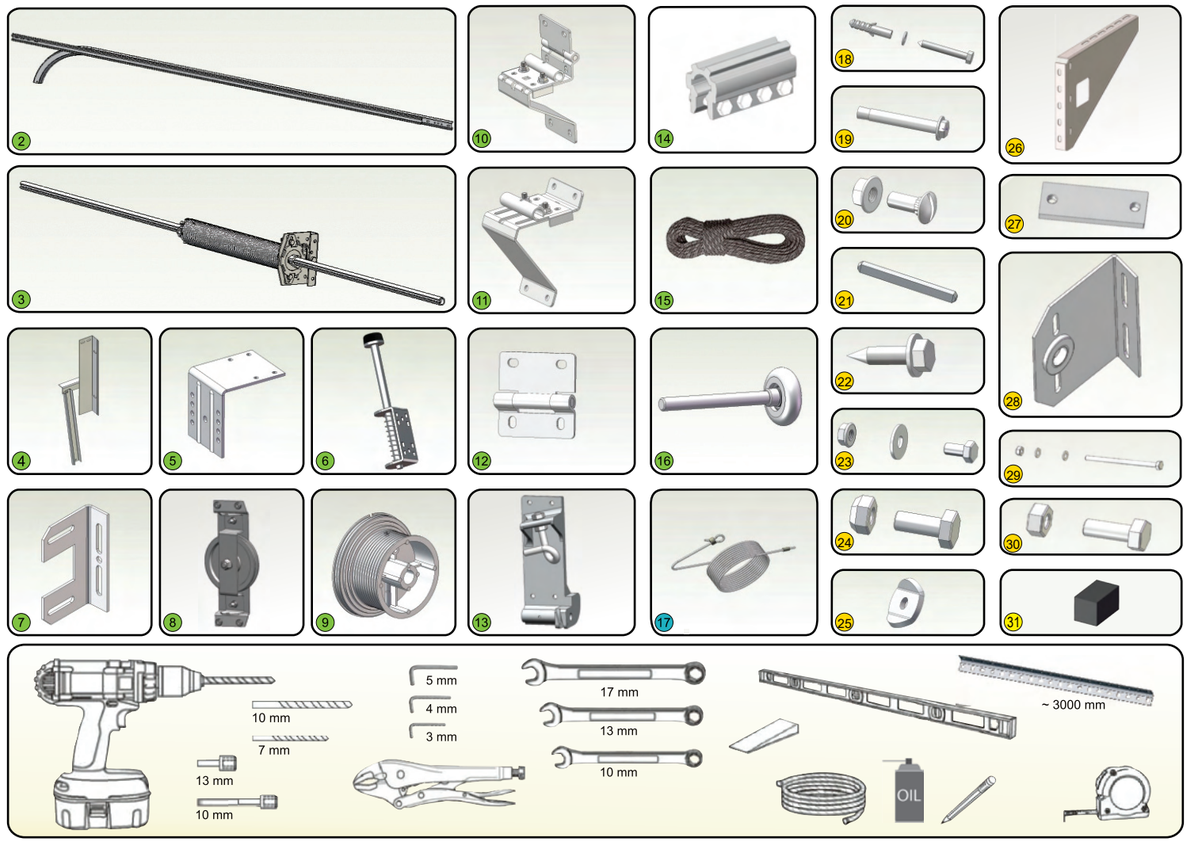
2
3
4
5
6
7
8
9
10
11
12
13
14
15
16
17
18
19
20
21
22
23
24
25
26
27
28
29
30
31
10 mm
7 mm
13 mm
10 mm
5 mm
4 mm
3 mm
17 mm
13 mm
10 mm
~ 3000 mm
OIL

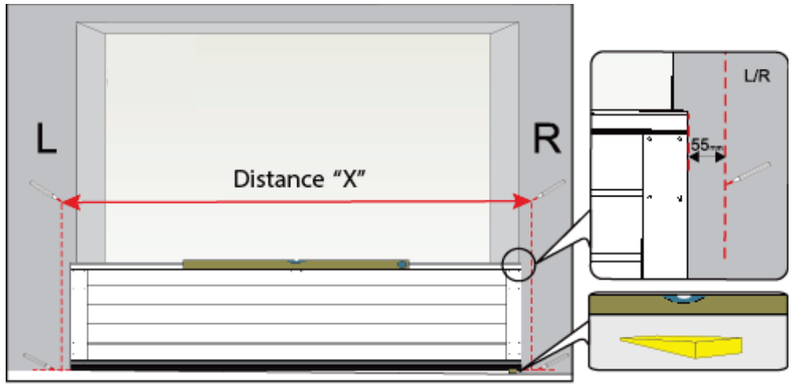
L
R
Distance "X"
L/R
55mm

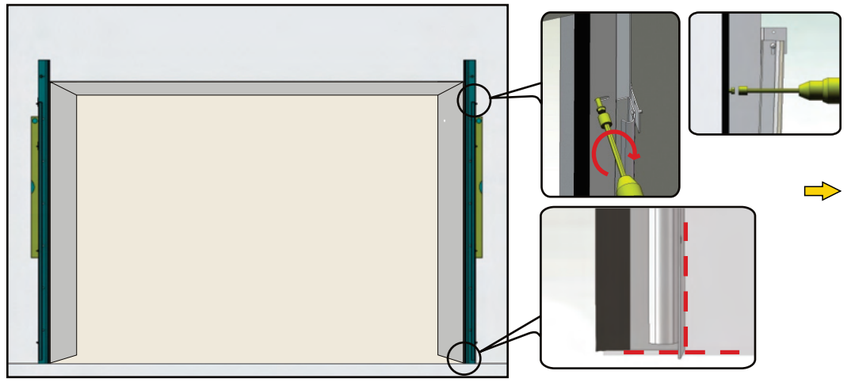

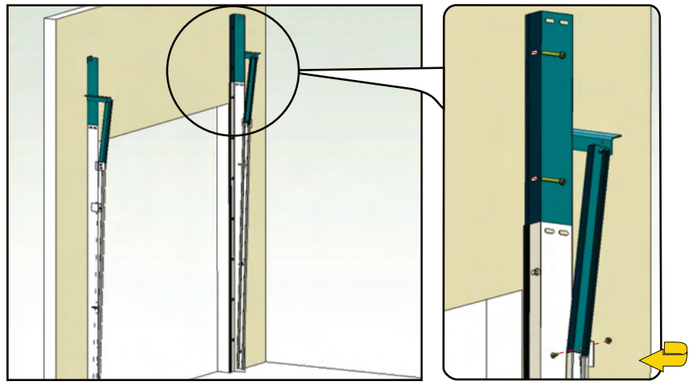

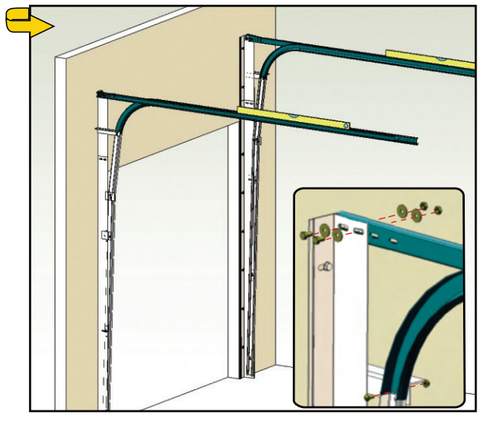

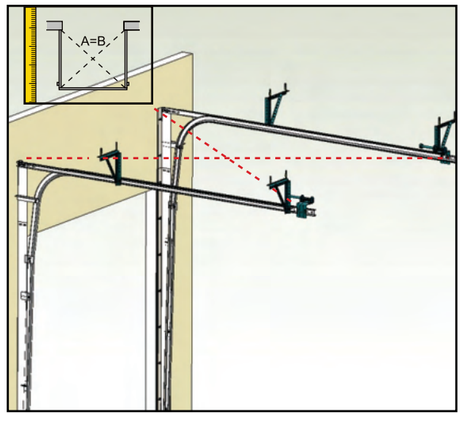
A=B

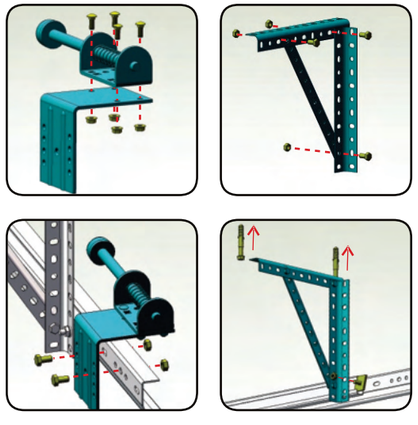

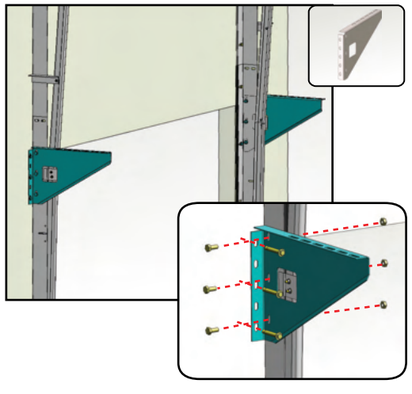

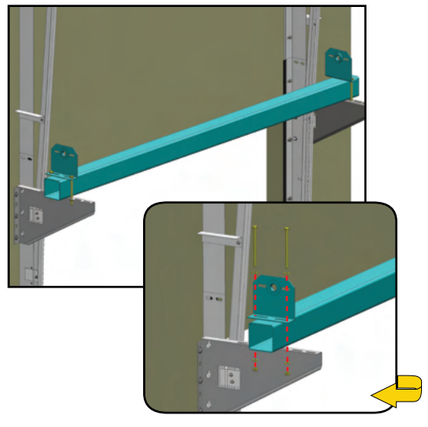

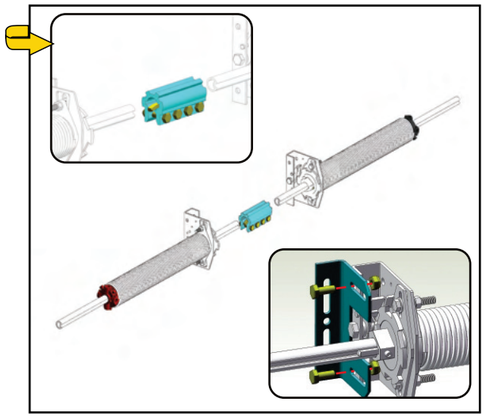

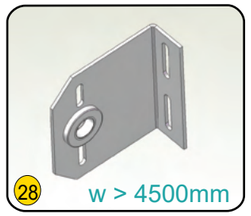
28
w > 4500mm

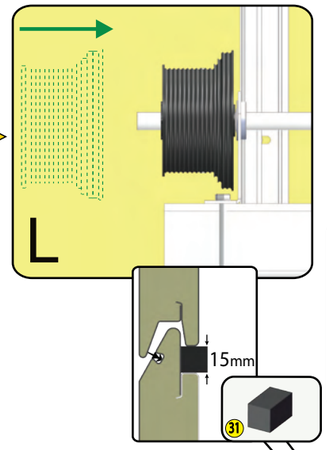
L
15mm
31

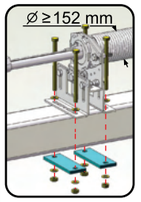
Ø ≥ 152 mm

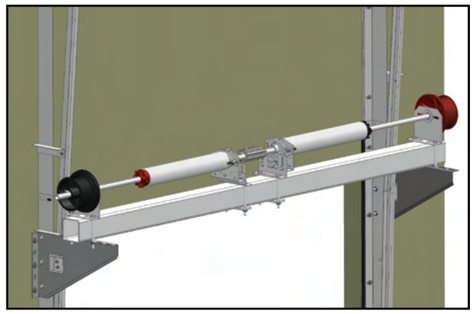

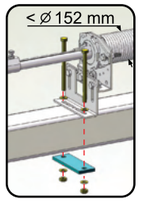
< Ø 152 mm

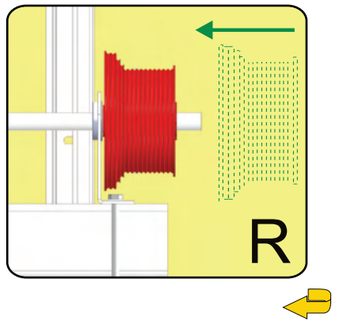
R

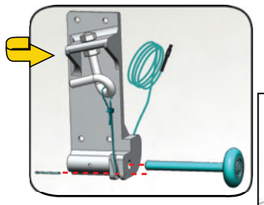

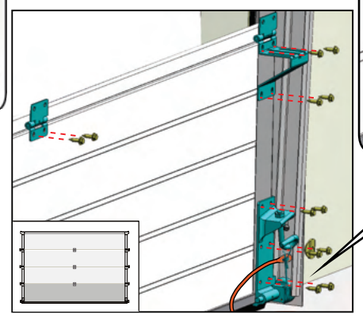

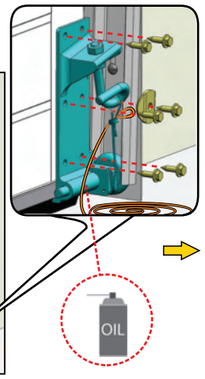
OIL

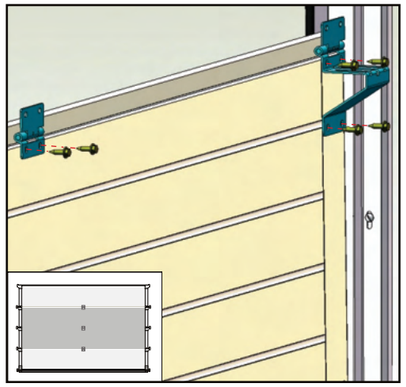

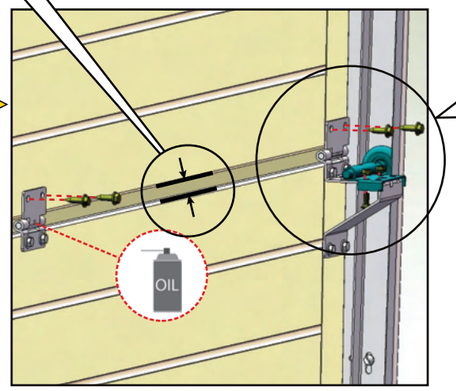
OIL

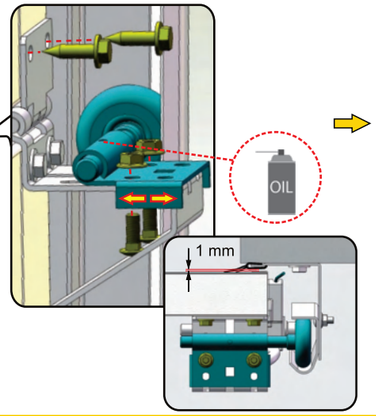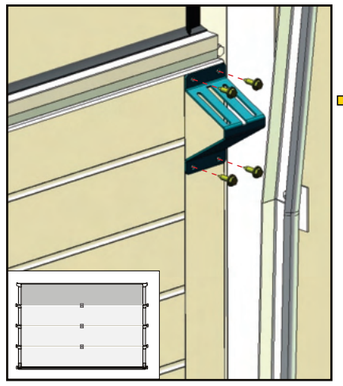
OIL
1 mm